Representations of quantum toroidal algebras —Recent topics—

Michio Jimbo (Rikkyo University, Japan)
Joint with Feigin, Miwa, Mukhin

Recent Advances in Quantum Integrable Systems
Angers, September 11, 2012

Brief history

- Let $\mathfrak{g}$ be a complex simple Lie algebra.

The affinization of $\mathfrak{g}$ is a Kac-Moody Lie algebra, also realized as a one-dimensional central extension of the loop algebra $\mathfrak{g} \otimes \mathbb{C}[t^{\pm}]$.
The toroidal Lie algebra is a further affinization, realized as a two-dimensional central extension of the double loop algebra $\mathfrak{g} \otimes \mathbb{C}[s^{\pm}, t^{\pm}]$.

- Quantum toroidal algebras are a quantization of torodial Lie algebras. They were first introduced by geometric methods in

V.Ginzburg, M.Kapranov and E.Vasserot,
Math. Res. Lett. **2** *(1995) 147–160*

The case $\mathfrak{g} = \mathfrak{gl}_n$ is special, in that one can introduce two deformation parameters in the algebra. From now on we consider only the $\mathfrak{gl}_n$ case.

- Some early studies include the Schur-Weyl duality

  M.Varagnolo and E.Vasserot, Commun. Math. Phys. **182** *(1996) 469–484*

and the construciton of Fock modules

  Y.Saito, K.Takemura and D.Uglov, Transf. Groups **1** *(1998) 75–102*

- Basic theory on the structure and representations has been established by a series of works by Miki (algebraic method à la Chari-Pressley and Beck)

  K. Miki, Lett. Math. Phys. **40** *(1999) 365–378; J. Math. Phys.* **41** *(2000) 7079–7098,* **42** *(2001) 2293–2308,* **48** *(2007) 123520;*

- Among others, the $\mathfrak{gl}_1$ toroidal algebra is particularly interesting for its simplicity and extra symmetry.

Originally introduced by Miki, also rediscovered by several authors, in connection with:

Macdonald functions and Virasoro/W-algebras,

> *B.Feigin, K.Hashizume, A.Hoshino, J.Shiraishi and S.Yanagida, J. Math. Phys.* **50** *(2009) 095215, B.Feigin and A. Tsymbaliuk, arXiv:0904.1679, Kyoto J. Math.* **51** *(2011) 831–854,*

double affine Hecke algebra (DAHA),

> *O.Schiffmann, arXiv:1004.2575 ,*

and others.

Very little has been known about concrete representations of quantum toroidal algebras (the only example: Fock representation). Our goal here is to explain an elementary/explicit construction of a large family of modules.

This talk is based on papers by B.Feigin, T.Miwa, E.Mukhin and MJ:

- Quantum toroidal $\mathfrak{gl}_1$ algebra : plane partitions, arXiv:1110.5310, to appear in *Kyoto J. Math.*
- Representations of quantum toroidal $\mathfrak{gl}_N$, arXiv:1204.5378,

and earlier ones by B.Feigin, E.Feigin, T.Miwa, E.Mukhin and MJ:

- Kyoto J. Math. **51** (2011) 337–364; *ibid.* 365–392

Plan of this talk

We shall mainly focus on the $\mathfrak{gl}_1$ case.

1. Basic definitions and known facts
2. Macmahon modules
3. Construction via Fock modules
4. Macmahon modules with boundary conditions
5. Resonances
6. $\mathfrak{gl}_n$ case

Quantum $\mathfrak{gl}_1$ toroidal algebra $\mathcal{E}$

The algebra $\mathcal{E}$ is defined from the following data.

parameters: $q_1, q_2, q_3 \in \mathbb{C}^\times$, $q_1 q_2 q_3 = 1$
generators: E_k, F_k, H_r, $K_0^\pm$, $C^{1/2}$ $(k \in \mathbb{Z},\ r \in \mathbb{Z}\backslash\{0\})$
We set

$$E(z) = \sum_{k\in\mathbb{Z}} E_k z^{-k}\,, \quad F(z) = \sum_{k\in\mathbb{Z}} F_k z^{-k}\,,$$

$$K^\pm(z) = K_0^\pm \exp\Big(\pm(q_2^{1/2} - q_2^{-1/2}) \sum_{\pm r>0} H_r z^{-r}\Big)\,,$$

$$g(z,w) = (z - q_1 w)(z - q_2 w)(z - q_3 w)\,,$$

$$\bar{g}(z,w) = (q_1 z - w)(q_2 z - w)(q_3 z - w)\,.$$

Relations:

$$K_0^{\pm}\,, C^{1/2}\text{: central invertible,}$$
$$K^{\pm}(z)K^{\pm}(w) = K^{\pm}(w)K^{\pm}(z),$$
$$g(Cz,w)\bar{g}(z,Cw)K^{+}(z)K^{-}(w) = g(z,Cw)\bar{g}(Cz,w)K^{-}(w)K^{+}(z)\,,$$
$$g(z,w)K^{\pm}(C^{\mp 1/2}z)E(w) = \bar{g}(z,w)E(w)K^{\pm}(C^{\mp 1/2}z),$$
$$\bar{g}(z,w)K^{\pm}(C^{\pm 1/2}z)F(w) = g(z,w)F(w)K^{\pm}(C^{\pm 1/2}z),$$
$$[E(z),F(w)] = \frac{1}{g(1,1)}(\delta(Cw/z)K^{+}(C^{1/2}w) - \delta(Cz/w)K^{-}(C^{1/2}z)),$$
$$g(z,w)E(z)E(w) = \bar{g}(z,w)E(w)E(z),$$
$$\bar{g}(z,w)F(z)F(w) = g(z,w)F(w)F(z),$$
$$[E_0,[E_1,E_{-1}]] = [F_0,[F_1,F_{-1}]] = 0.$$

Remark

1. Various names:
   - (q, γ)-analog of $\mathcal{W}_{1+\infty}$ (Miki),
   - Ding-Iohara algebra (Feigin, Shiraishi,$\cdots$),
   - elliptic Hall algebra (Schiffmann)
2. $\mathcal{E}$ is symmetric in q_1, q_2, q_3 (not true for $\mathcal{E}_n$, $n \geq 2$)
3. $\mathcal{E}$ is isomorphic to the spherical DAHA (Schiffmann 2010)

$SL(2,\mathbb{Z})$-action

Automorphisim [Miki 2007]

There exists an order 4 autmorphism ψ of $\mathcal{E}$ such that

$$H_1 \mapsto c_1 E_0, \quad H_{-1} \mapsto c_2 F_0,$$
$$E_0 \mapsto -c_1^{-1} H_{-1}, \quad F_0 \mapsto -c_2^{-1} H_1,$$
$$C \mapsto K_0, \quad K_0 \mapsto C^{-1}$$

- Hereafter we assume that q_i's are generic, i.e.,

$$q_1^{j_1} q_2^{j_2} q_3^{j_3} = 1 \text{ only if } j_1 = j_2 = j_3.$$

- An $\mathcal{E}$-module V is of level (x, y) if C acts as sclar x and $(K_0^+)^{-1} K_0^-$ as y.

- In the rest of this talk we consider modules of level $(1, y)$, i.e. $C = 1$. Then the operators $K^{\pm}(z)$ are mutually commutative.

Lowest weight modules

An $\mathcal{E}$-module V is called lowest weight if $V = \mathcal{E}v$ with

$$F(z)v = 0\,, \quad K^{\pm}(z)v = \phi^{\pm}(z)v\,, \quad Cv = v\,,$$

for some formal power series $\phi^{\pm}(z)$ in $z^{\mp 1}$. $(\phi^{+}(z), \phi^{-}(z))$ is called the lowest weight of V.
Assign degrees by

$$\mathrm{deg}\, E_k = 1, \quad \mathrm{deg}\, F_k = -1, \quad \mathrm{deg}\, H_r = 0\,.$$

A graded $\mathcal{E}$-module $V = \bigoplus_{k \in \mathbb{Z}} V_k$ is called quasi-finite if

$$\dim V_k < \infty \quad (\forall k).$$

Classification [Miki 2007]

1) An irreducible lowest weight module M is in one-to-one correspondence with its lowest weight $(\phi^+(z), \phi^-(z))$.
2) M is quasi-finite if and only if $\phi^\pm(z)$ are expansions of a common rational function $\phi(z)$ in $z^{\mp 1}$.

Classification [Miki 2007]

1) An irreducible lowest weight module M is in one-to-one correspondence with its lowest weight $(\phi^+(z), \phi^-(z))$.
2) M is quasi-finite if and only if $\phi^\pm(z)$ are expansions of a common rational function $\phi(z)$ in $z^{\mp 1}$.

So, given a rational function $\phi(z)$ which is regular and non-zero at $z = 0, \infty$, there corresponds a unique irreducible lowest weight $\mathcal{E}$-module M. From the definition, however, it is hard to tell how it looks like. For instance, what is the character

$$\chi(M) = \sum_k q^k \dim M_k \,.$$

Macmahon modules

A Macmahon module $M(u, K)$ is the irreducible lowest weight module whose lowest weight is

$$\phi(z) = \frac{1 - Ku/z}{1 - u/z} \quad (u, K \in \mathbb{C}).$$

We shall construct $M(u, K)$ explicitly.

Macmahon modules

A Macmahon module $M(u, K)$ is the irreducible lowest weight module whose lowest weight is

$$\phi(z) = \frac{1 - Ku/z}{1 - u/z} \quad (u, K \in \mathbb{C}).$$

We shall construct $M(u, K)$ explicitly.

Main features:

1. $M(u, K)$ has a basis parametrized by all plane partitions,

Macmahon modules

A Macmahon module $M(u, K)$ is the irreducible lowest weight module whose lowest weight is

$$\phi(z) = \frac{1 - Ku/z}{1 - u/z} \quad (u, K \in \mathbb{C}).$$

We shall construct $M(u, K)$ explicitly.

Main features:

1. $M(u, K)$ has a basis parametrized by all plane partitions,
2. $K^{\pm}(z)$ act diagonally on them with simple joint spectrum,

Macmahon modules

A Macmahon module $M(u, K)$ is the irreducible lowest weight module whose lowest weight is

$$\phi(z) = \frac{1 - Ku/z}{1 - u/z} \quad (u, K \in \mathbb{C}).$$

We shall construct $M(u, K)$ explicitly.

Main features:

1. $M(u, K)$ has a basis parametrized by all plane partitions,
2. $K^{\pm}(z)$ act diagonally on them with simple joint spectrum,
3. $E(z)$ adds a box and $F(z)$ removes a box, with explicitly given matrix coefficients.

A plane parition $\boldsymbol{\lambda} = (\lambda^{(1)}, \lambda^{(2)}, \lambda^{(3)}, \cdots)$ is a sequence of ordinary partitions (Young diagrams) satisfying

$$\lambda^{(1)} \supset \lambda^{(2)} \supset \lambda^{(3)} \supset \cdots, \quad \lambda^{(N)} = \emptyset \ (N \gg 0).$$

Denote the set of all plane partitions by $\boldsymbol{\pi}$.
We visualize $\boldsymbol{\lambda} \in \boldsymbol{\pi}$ as a 3-dimensional Young diagram $Y_{\boldsymbol{\lambda}}$, where the k-th Young daigram $\lambda^{(k)}$ is "sitting on the k-th floor".

3D Young diagram $Y_{\boldsymbol{\lambda}}$

$\boldsymbol{\lambda} = (\lambda^{(1)}, \lambda^{(2)}, \lambda^{(3)})$

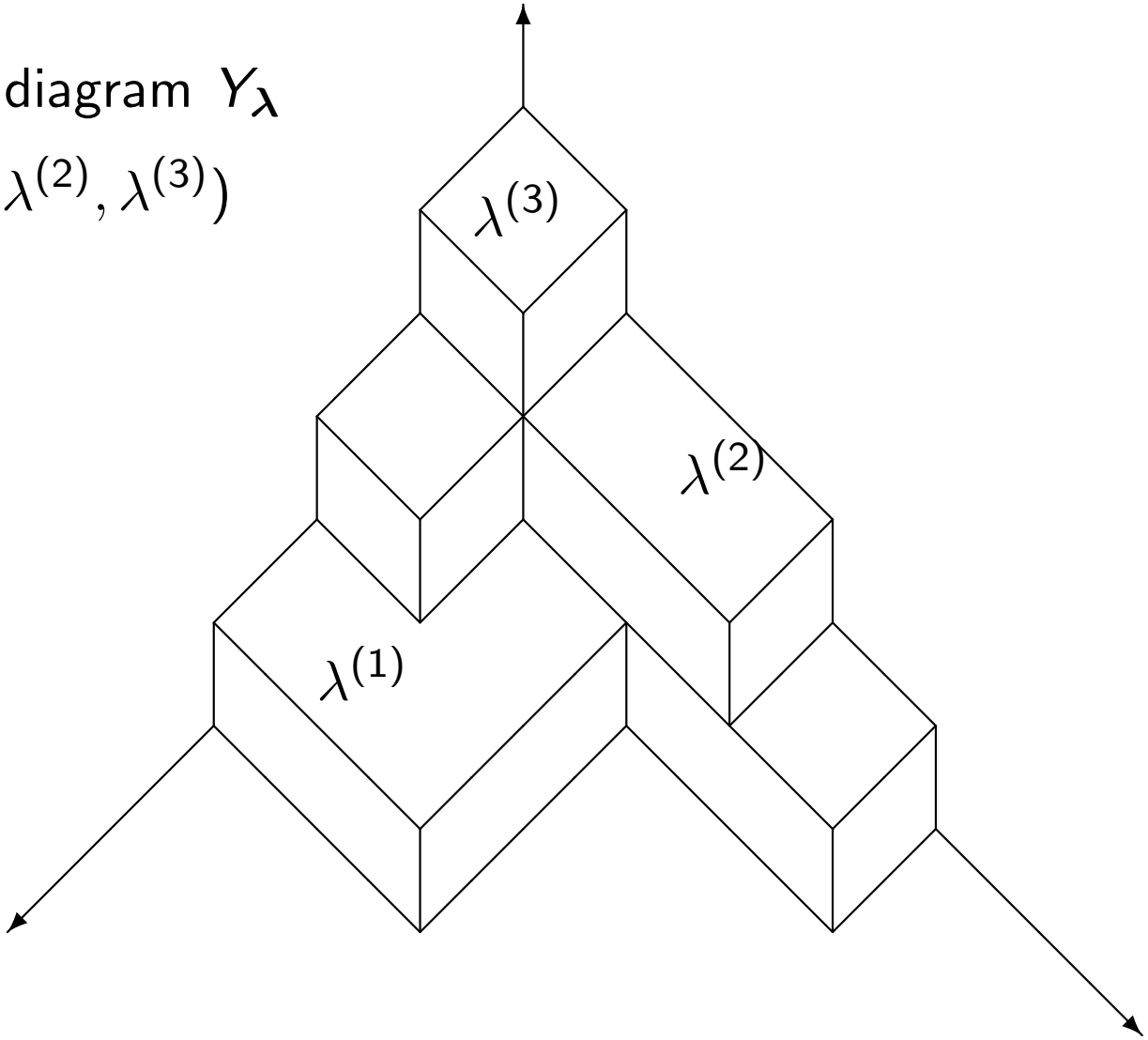

Let $M(u,K)$ be a vector space with basis $|\boldsymbol{\lambda}\rangle$ ($\boldsymbol{\lambda} \in \boldsymbol{\pi}$).
There is an action of $\mathcal{E}$ on $M(u,K)$ of the form

$$K^{\pm}(z)|\boldsymbol{\lambda}\rangle = \psi_{\boldsymbol{\lambda}}(u/z)|\boldsymbol{\lambda}\rangle,$$

$$(1-q_1)E(z)|\boldsymbol{\lambda}\rangle = \sum_{(i,j,k)\,:\,\text{concave}} \psi_{\boldsymbol{\lambda},i,j,k}\psi_{\lambda^{(k)},i}\delta\big(q_3^i q_1^j q_2^k\big)|\boldsymbol{\lambda}+1_i^{(k)}\rangle\,,$$

$$(q_1^{-1}-1)F(z)|\boldsymbol{\lambda}\rangle = \sum_{(i,j,k)\,:\,\text{convex}} \psi'_{\boldsymbol{\lambda},i,j,k}\psi'_{\lambda^{(k)},i}\delta\big(q_3^i q_1^j q_2^k\big)|\boldsymbol{\lambda}-1_i^{(k)}\rangle\,,$$

All coefficients have factorized form, e.g.,

$$\psi_{\boldsymbol{\lambda}}(u/z) = \frac{1-Ku/z}{1-u/z}\prod_{(i,j,k)\in Y_{\boldsymbol{\lambda}}} h(q_3^i q_1^j q_2^k u/z)\,,$$

$$h(z) = \frac{(1-q_1^{-1}z)(1-q_2^{-1}z)(1-q_3^{-1}z)}{(1-q_1z)(1-q_2z)(1-q_3z)}\,.$$

For generic K, $M(u, K)$ is an irreducible, tame, lowest weight $\mathcal{E}$-module of lowest weight $\dfrac{1 - Ku/z}{1 - u/z}$ and level $(1, K)$.

For generic K, $M(u,K)$ is an irreducible, tame, lowest weight $\mathcal{E}$-module of lowest weight $\dfrac{1-Ku/z}{1-u/z}$ and level $(1,K)$.

By the Macmahon formula for plane partitions, we have

$$\chi\big(M(u,K)\big) = \prod_{i=1}^{\infty} \frac{1}{(1-q^i)^i}\,.$$

Idea of construction

Fock module for $\mathfrak{gl}_\infty$ is constructed as a semi-infinite wedge

$$\mathcal{F}_{\mathfrak{gl}_\infty} = V \wedge V \wedge V \wedge \cdots, \quad V = \mathbb{C}^\infty$$

Idea of construction

Fock module for $\mathfrak{gl}_\infty$ is constructed as a semi-infinite wedge

$$\mathcal{F}_{\mathfrak{gl}_\infty} = V \wedge V \wedge V \wedge \cdots, \quad V = \mathbb{C}^\infty$$

We construct the Macmahon module analogously, following two-step semi-infinite constructions

$$V(u) \Longrightarrow \mathcal{F}(u) \Longrightarrow M(u, K)$$

The main points are the Drinfeld coproduct and the structures of zeroes of the matrix coefficients.

Vector representation

Let $V(u) = \bigoplus_{i\in\mathbb{Z}} \mathbb{C}[u]_i$.

The following formula defines an $\mathcal{E}$-module structure on $V(u)$:

$$(1-q_1)E(z)[u]_i = \delta\big(q_1^i u/z\big)[u]_{i+1}\,,$$
$$(q_1^{-1}-1)F(z)[u]_i = \delta\big(q_1^{i-1} u/z\big)[u]_{i-1}\,,$$
$$K^{\pm}(z)[u]_i = \psi\big(q_1^i u/z\big)[u]_i\,,$$

where

$$\psi(z) = \frac{(1-q_2 z)(1-q_3 z)}{(1-z)(1-q_2 q_3 z)}\,.$$

Drinfled coproduct

Algebra $\mathcal{E}$ has the following formal coproduct ($C = 1$, for simplicity)

$$\Delta E(z) = E(z) \otimes 1 + K^{-}(z) \otimes E(z),$$
$$\Delta F(z) = F(z) \otimes K^{+}(z) + 1 \otimes F(z),$$
$$\Delta K^{\pm}(z) = K^{\pm}(z) \otimes K^{\pm}(z),$$

The right hand side is an infinite series, so it is not defined in the usual sense.

Example. In $V(u) \otimes V(v)$,

$$(1-q_1)E(z)[u]_i \otimes [v]_j = \delta(q_1^i u/z)[u]_{i+1} \otimes [v]_j$$
$$+ \frac{1-q_2 q_1^{i-j} u/v}{1-q_1^{i-j} u/v} \frac{1-q_3 q_1^{i-j} u/v}{1-q_2 q_3 q_1^{i-j} u/v} \times \delta(q_1^j v/z)[u]_i \otimes [v]_{j+1}$$

For generic u, v, $V(u) \otimes V(v)$ is an well-defined irreducible $\mathcal{E}$-module. (For special values of u/v, poles can appear.)

Example. In $V(u) \otimes V(v)$,

$$(1-q_1)E(z)[u]_i \otimes [v]_j = \delta(q_1^i u/z)[u]_{i+1} \otimes [v]_j$$
$$+ \frac{1-q_2 q_1^{i-j} u/v}{1-q_1^{i-j} u/v} \frac{1-q_3 q_1^{i-j} u/v}{1-q_2 q_3 q_1^{i-j} u/v} \times \delta(q_1^j v/z)[u]_i \otimes [v]_{j+1}$$

For generic u, v, $V(u) \otimes V(v)$ is an well-defined irreducible $\mathcal{E}$-module. (For special values of u/v, poles can appear.)
Take $v = q_2^{-1} u$. Then

- Poles do not occur,
- The subspace

$$\mathrm{span}\{[u]_i \otimes [uq_2^{-1}]_j \mid i > j\} \subset V(u) \otimes V(q_2^{-1} u)$$

  is invariant under $E(z)$ because of the zero $1 - q_3 q_1^{i-j} u/v = 0$.

Example. In $V(u) \otimes V(v)$,

$$(1-q_1)E(z)[u]_i \otimes [v]_j = \delta(q_1^i u/z)[u]_{i+1} \otimes [v]_j$$
$$+ \frac{1-q_2 q_1^{i-j} u/v}{1-q_1^{i-j} u/v} \frac{1-q_3 q_1^{i-j} u/v}{1-q_2 q_3 q_1^{i-j} u/v} \times \delta(q_1^j v/z)[u]_i \otimes [v]_{j+1}$$

For generic u, v, $V(u) \otimes V(v)$ is an well-defined irreducible $\mathcal{E}$-module. (For special values of u/v, poles can appear.)
Take $v = q_2^{-1} u$. Then

- Poles do not occur,
- The subspace

$$\mathrm{span}\{[u]_i \otimes [uq_2^{-1}]_j \mid i > j\} \subset V(u) \otimes V(q_2^{-1} u)$$

  is invariant under $E(z)$ because of the zero $1 - q_3 q_1^{i-j} u/v = 0$.

Easy to check that this subspace is a well-defined $\mathcal{E}$-module. (It can be thought of as an analog of $\wedge^2 V(u)$.)

A semi-infinite construction

Consider the subspace of the infinite tensor product

$$\mathcal{F}(u) \subset V(u) \otimes V(uq_2^{-1}) \otimes V(uq_2^{-2}) \otimes \cdots$$
$$\mathcal{F}(u) = \mathrm{span}\{|\lambda\rangle \mid \lambda_1 \geq \lambda_2 \geq \cdots, \lambda_i \in \mathbb{Z}, \lambda_i = 0\,(i \gg 0)\}$$

where

$$|\lambda\rangle = [u]_{\lambda_1} \otimes [uq_2^{-1}]_{\lambda_2 - 1} \otimes [uq_2^{-2}]_{\lambda_3 - 2} \otimes \cdots .$$

The action of $E(z)$ is well defined on $\mathcal{F}(u)$.

A semi-infinite construction

Consider the subspace of the infinite tensor product

$$\mathcal{F}(u) \subset V(u) \otimes V(uq_2^{-1}) \otimes V(uq_2^{-2}) \otimes \cdots$$
$$\mathcal{F}(u) = \mathrm{span}\{|\lambda\rangle \mid \lambda_1 \geq \lambda_2 \geq \cdots, \lambda_i \in \mathbb{Z}, \lambda_i = 0\,(i \gg 0)\}$$

where

$$|\lambda\rangle = [u]_{\lambda_1} \otimes [uq_2^{-1}]_{\lambda_2 - 1} \otimes [uq_2^{-2}]_{\lambda_3 - 2} \otimes \cdots .$$

The action of $E(z)$ is well defined on $\mathcal{F}(u)$.
The actions of $F(z)$, $K^{\pm}(z)$ need interpretation as they involve a formal infinite product. We define a modified action as follows.

Given a partition λ, take N large enough and consider a vector

$$|\lambda\rangle^{(N)} = [u]_{\lambda_1} \otimes [uq_2^{-1}]_{\lambda_2-1} \otimes \cdots \otimes [uq_2^{-N+2}]_{-N+2} \otimes [uq_2^{-N+1}]_{-N+1}$$

in the finite tensor product

$$\mathcal{F}^{(N)}(u) = V(u) \otimes V(uq_2^{-1}) \otimes V(uq_2^{-2}) \otimes \cdots \otimes V(uq_2^{-N+1}).$$

Then the modified action

$$\begin{aligned} F^{new}(z)|\lambda\rangle^{(N)} &= \beta_N(z) \cdot F(z)|\lambda\rangle^{(N)}, \\ K^{\pm,new}(z)|\lambda\rangle^{(N)} &= \beta_N(z) \cdot K^{\pm}(z)|\lambda\rangle^{(N)}, \\ \beta_N(z) &= \frac{1 - q_3^N u/z}{1 - q_2^{-1} q_3^N u/z} \end{aligned}$$

is compatible with the embedding $\mathcal{F}^{(N)}(u) \hookrightarrow \mathcal{F}^{(N+1)}(u)$.

Fock module

With the above definition, $\mathcal{F}(u)$ is a well-defined $\mathcal{E}$-module. $\mathcal{F}(u)$ is an irreducible, tame, lowest weight module of lowest weight $\dfrac{1-q_2u/z}{1-u/z}$ and level $(1, q_2)$.

All matrix coefficients are factorized. e.g.

$$\langle\lambda|K^{\pm}(z)|\lambda\rangle = \prod_{(i,j):\text{concave}} \frac{1-q_3^i q_1^j q_2^2 u/z}{1-q_3^i q_1^j q_2 u/z} \prod_{(i,j):\text{convex}} \frac{1-q_3^i q_1^j u/z}{1-q_3^i q_1^j q_2 u/z},$$

In this form, $\mathcal{F}(u)$ was found by Feigin-Tsymbaliuk with a geometric method.

From Fock to Macmahon

One can repeat the same construction, using $\mathcal{F}(u)$ in place of $V(u)$. We use

Lemma: Let $a, b \in \mathbb{Z}_{\geq 0}$, and let

$$v/u = q_1^{-a} q_2 q_3^{-b}.$$

Then the subspace

$$\mathrm{span}\{|\lambda\rangle \otimes |\mu\rangle \mid \lambda_i + a \geq \mu_{i+b} \ (\forall i)\} \subset \mathcal{F}(u) \otimes \mathcal{F}(v)$$

is an $\mathcal{E}$-submodule.

Choosing $a = b = 0$ in the Lemma, consider the subspace of an infinite tensor product of Fock modules

$$M(u, K) \subset \mathcal{F}(u) \otimes \mathcal{F}(uq_2) \otimes \mathcal{F}(uq_2^2) \otimes \cdots$$
$$M(u, K) = \mathrm{span}\{|\boldsymbol{\lambda}\rangle \mid \boldsymbol{\lambda} \in \boldsymbol{\pi}\}$$

where for $\boldsymbol{\lambda} = (\lambda^{(1)}, \lambda^{(2)}, \cdots)$ we set

$$|\boldsymbol{\lambda}\rangle = |\lambda^{(1)}\rangle \otimes |\lambda^{(2)}\rangle \otimes \cdots \otimes |\emptyset\rangle \otimes \cdots .$$

As before, $E(z)$ has a well-defined action on $M(u, K)$.
For each $\boldsymbol{\lambda} \in \boldsymbol{\pi}$, the modification

$$F^{new}(z)|\lambda\rangle^{(N)} = \frac{1 - Ku/z}{1 - u/z} \cdot F(z)|\lambda\rangle^{(N)},$$
$$K^{\pm,new}(z)|\lambda\rangle^{(N)} = \frac{1 - Ku/z}{1 - u/z} \cdot K^{\pm}(z)|\lambda\rangle^{(N)},$$

leads to the action of $F(z), K(z)$ on $M(u, K)$.

Macmahon modules with boundary conditions

More generally, let α, β, γ be given partitions. Let $M_{\alpha,\beta,\gamma}(u, K)$ be the vector space spanned by infinite plane partitions $\boldsymbol{\mu}$ such that

$$\begin{aligned} \mu_i^{(k)} &= \alpha_k \quad (i \gg 0)\,, \\ \mu_i^{(k)} &= \gamma_i \quad (k \gg 0)\,, \\ \mu_i^{(k)} &= \infty \quad \text{ if } 1 \le i \le \beta_k\,. \end{aligned}$$

Let $\boldsymbol{\omega}$ be the minimal plane partition with this boundary condition.

There is an action of $\mathcal{E}$ on $M_{\alpha,\beta,\gamma}(u, K)$. It is an irreducible, tame, lowest weight module of level $(1, K)$ and lowest vector $|\boldsymbol{\omega}\rangle$.

Macmahon module with boundary (α, β, γ).
The minimal diagram $Y_{\boldsymbol{\omega}}$ is shown.

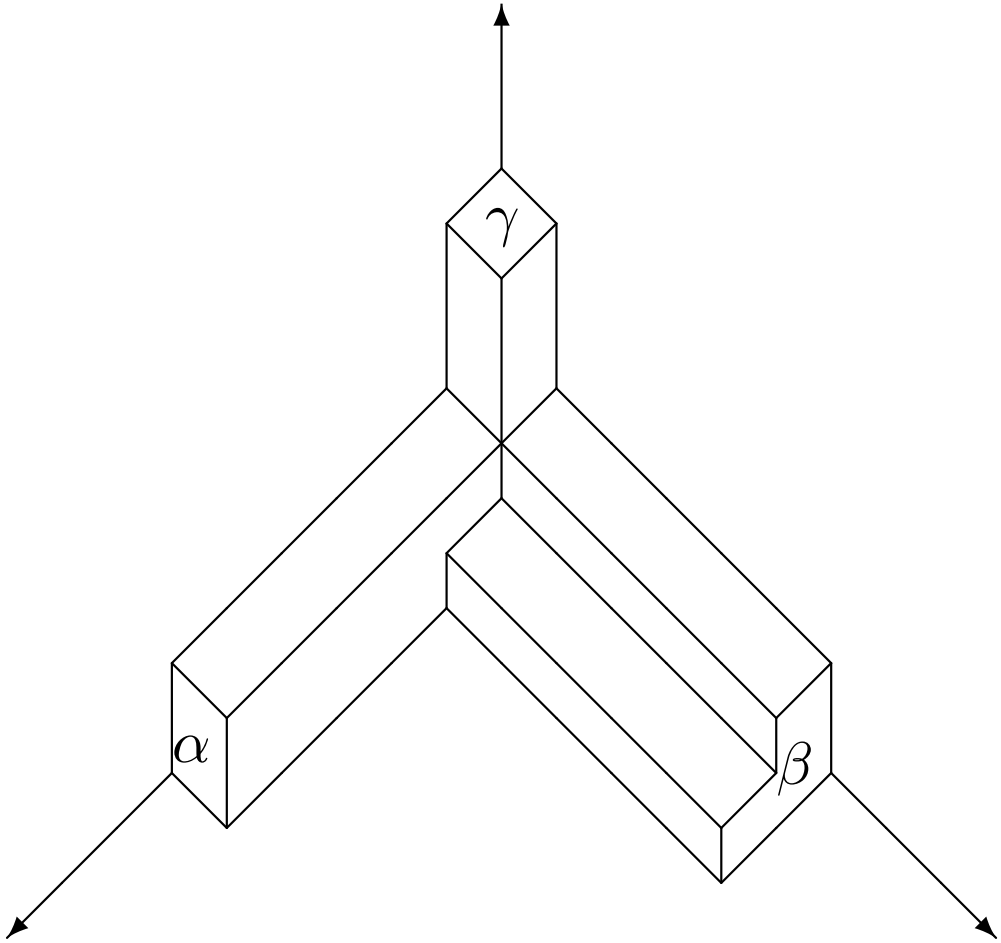

Lowest weights of $M_{\alpha,\beta,\gamma}(u,K)$

α	β	γ	Lowest weight
$\emptyset$	$\emptyset$	$\emptyset$	$\dfrac{1-Ku/z}{1-u/z}$
$\{1\}$	$\emptyset$	$\emptyset$	$\dfrac{(1-Ku/z)(1-q_1q_2u/z)}{(1-q_1u/z)(1-q_2u/z)}$
$\{2\}$	$\emptyset$	$\emptyset$	$\dfrac{(1-Ku/z)\left(1-q_1^2q_2u/z\right)}{\left(1-q_1^2u/z\right)\left(1-q_2u/z\right)}$
$\{1\}$	$\{1\}$	$\emptyset$	$\dfrac{(1-Ku/z)(1-q_1q_2q_3u/z)}{(1-q_2u/z)(1-q_1q_3u/z)}$
$\{1\}$	$\{1\}$	$\{1\}$	$\dfrac{(1-Ku/z)(1-q_1q_2q_3u/z)^2}{(1-q_1q_2u/z)(1-q_1q_3u/z)(1-q_2q_3u/z)}$

Resonances

When the parameters K, u or q_1, q_2, q_3 take special values, $M_{\alpha,\beta,\gamma}(u, K)$ become reducible. We call this a resonant case.

We consider only the case where q_1, q_2, q_3 are generic but K is special:

$$K = q_2^m q_3^n \quad (m, n \in \mathbb{Z}_{\geq 0}),$$

In this case, the action of $F(z)$ cannot remove the boxes at $(a + t, b + t, c + t)$ $(y \in \mathbb{Z}_{\geq 0})$, where

$$(a, b, c) \in Y_{\boldsymbol{\omega}}, \quad (a - 1, b - 1, c - 1) \notin Y_{\boldsymbol{\omega}}.$$

Correspondingly there is a series of submodules

$$M_{\alpha,\beta,\gamma}(u, K) = M^{m,n,0}_{\alpha,\beta,\gamma}(u) \supset M^{m,n,1}_{\alpha,\beta,\gamma}(u) \supset M^{m,n,2}_{\alpha,\beta,\gamma}(u) \supset \cdots$$

Let

$$N^{m,n}_{\alpha,\beta,\gamma}(u) := M^{m,n,0}_{\alpha,\beta,\gamma}(u)/M^{m,n,1}_{\alpha,\beta,\gamma}(u)$$

be the first irreducible quotient.

For example, if $K = q_2$ then $M^{1,0,1}_{\emptyset,\emptyset,\emptyset}(u)$ contain all diagrams containing the box $(0,0,1)$. Hence

$$N^{1,0}_{\emptyset,\emptyset,\emptyset}(u) = \mathcal{F}(u)\,.$$

Characters of $N^{n,n}_{\alpha,\emptyset,\emptyset}(u)$

In general, it is a challenge to determine the character of $N^{m,n}_{\alpha,\beta,\gamma}(u)$. The following result is a special case.

$$\chi_k = \bar{\chi}_k, \quad \chi_{-k} = q^k \bar{\chi}_k \quad (k \in \mathbb{Z}_{\geq 0}),$$
$$\bar{\chi}_k = \frac{1}{(q)_\infty^2} \sum_{j=0}^{\infty} (-1)^j q^{j(j+1)/2+jk}.$$

$$\chi(N^{n,n}_{\alpha,\emptyset,\emptyset}) = \sum_{\sigma \in S_n} (-1)^{\ell(\sigma)} \prod_{i=1}^{n} \chi_{(\sigma(\alpha+\rho)-\rho)_i}.$$

$\mathfrak{gl}_n$ case ($n \geq 3$)

Almost all constructions for the $\mathfrak{gl}_1$-quantum toroidal algebra carry over to the case of $\mathfrak{gl}_n$. Minor differences are:

- Algebra is symmetric in q_3, q_1 but q_2 plays a different role.,
- Boxes in (plane) partitions are colored ((i, j, k) has color $i - j \bmod n$),
- Macmahon modules with boundary conditions can be defined only when partition γ is colorless.

Summary

Summary

1. We have obtained a new family of modules of quantum toroidal algebras.

Summary

1. We have obtained a new family of modules of quantum toroidal algebras.
2. The actions of generators are explicit and the joint spectrum of the $K(z)$'s is simple.

Summary

1. We have obtained a new family of modules of quantum toroidal algebras.
2. The actions of generators are explicit and the joint spectrum of the $K(z)$'s is simple.
3. This allows a combinatorial study of these modules.

Summary

1. We have obtained a new family of modules of quantum toroidal algebras.
2. The actions of generators are explicit and the joint spectrum of the $K(z)$'s is simple.
3. This allows a combinatorial study of these modules.

Open questions

1. Characters
2. Resonances in K (e.g. $K = q_1 q_2 q_3$)
3. Resonances in q_1, q_2, q_3

Summary

1. We have obtained a new family of modules of quantum toroidal algebras.
2. The actions of generators are explicit and the joint spectrum of the $K(z)$'s is simple.
3. This allows a combinatorial study of these modules.

Open questions

1. Characters
2. Resonances in K (e.g. $K = q_1 q_2 q_3$)
3. Resonances in q_1, q_2, q_3
4. *Are there integrable models which have $\mathcal{E}$ as its symmetry?*

THANK YOU VERY MUCH FOR YOUR ATTENTION